[illegible]

[illegible]

[illegible]

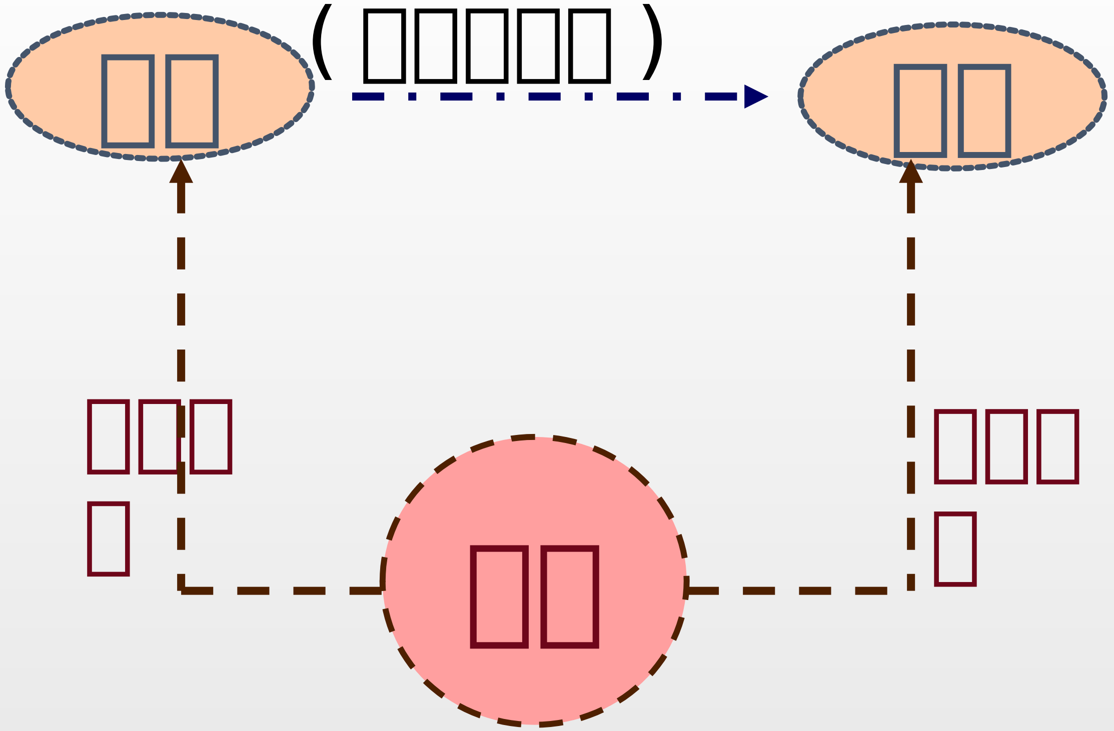

1. [illegible]
2. [illegible]
3. [illegible]

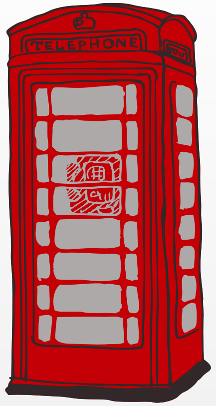

你了解文科生吗？
你分得清楚主次矛盾和矛盾的主次方面吗？
你明白文艺复兴和启蒙运动的兴起异同吗？
blablabla。。。

01

[illegible]

[illegible]

1. [illegible]
2. [illegible]
3. [illegible]

矛
盾

[illegible]

[illegible]

[illegible]

[illegible]

[illegible]

[illegible]

[illegible]

[illegible]

[illegible]

[illegible]

[illegible]

[illegible]

你敢吗？

[illegible] 1 [illegible]

[illegible]

- ① [illegible]
- ②“[illegible]”[illegible]“[illegible]”[illegible]
  [illegible]
- ③ [illegible]
  [illegible]
  [illegible]

[illegible] 2 [illegible]“[illegible]”

①“[illegible]”[illegible]“[illegible]”[illegible]

②“[illegible]”[illegible]

③“[illegible]”[illegible]

3

——

——

1 [illegible]

[illegible]“[illegible]”[illegible]( )

C

A [illegible]

B [illegible]

C [illegible]

D [illegible]

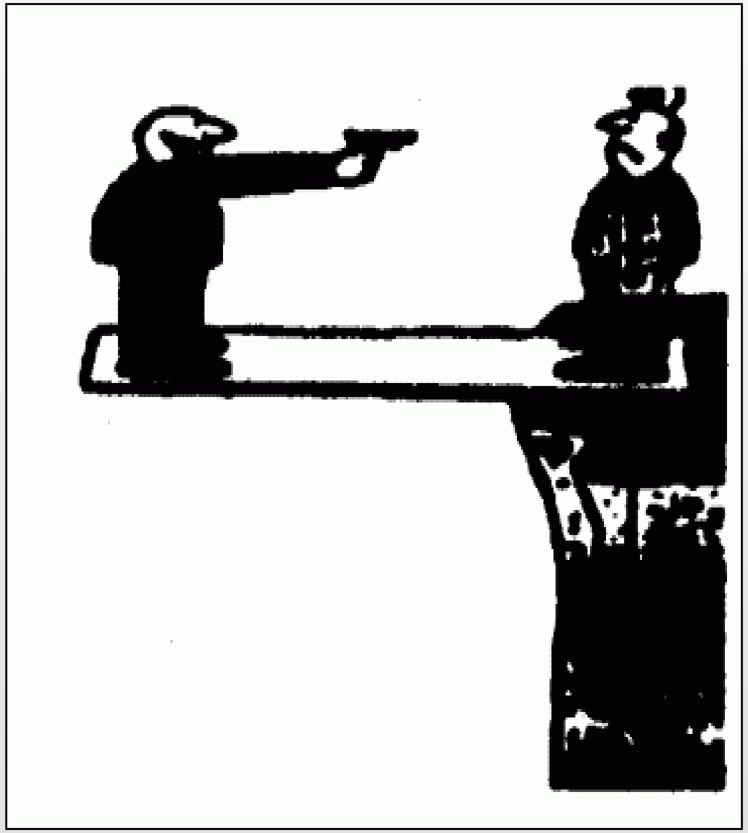

1.

①

“”

②

1. [illegible] [illegible]

① [illegible]

② [illegible]

[illegible]

“[illegible]”

1 [illegible]
2 [illegible]
3 [illegible]
4 [illegible]
5 [illegible]

[illegible]

[illegible]

[illegible]“[illegible]”[illegible]

[illegible]

[illegible]

[illegible]

[illegible]

[illegible]

2. [illegible]

A [illegible]

B [illegible] **C**

C [illegible]

D [illegible]

3. [illegible]

（ [illegible]

D

A [illegible]

B [illegible]

C [illegible]

D [illegible]

2.

[illegible]

[illegible]“[illegible]” = [illegible] = [illegible] = [illegible]

[illegible]

[illegible]“[illegible]” ≠ [illegible]“[illegible]”

[illegible]

[illegible]

[illegible]

[illegible]

1. [illegible]

2. [illegible]

3. [illegible]

4. [illegible]

5. [illegible]

6. [illegible]

A. [illegible]

B. [illegible]

C. [illegible]

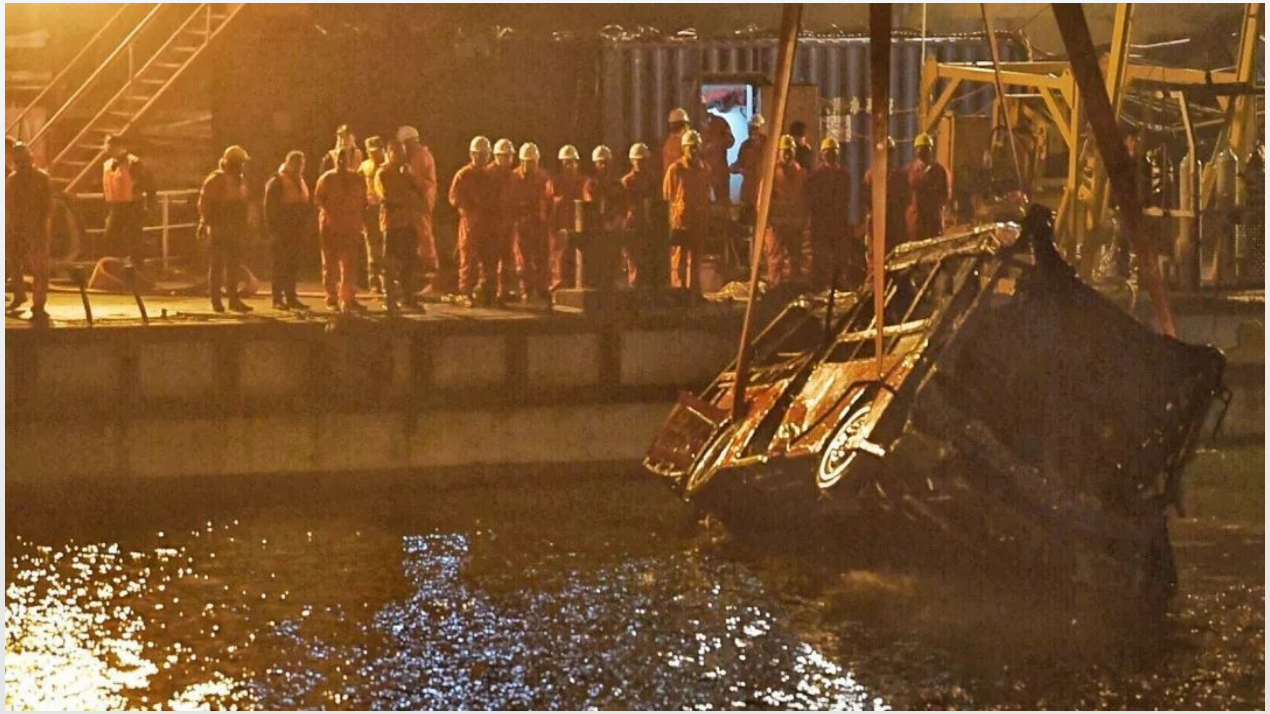

4. [illegible] (   )

C

① [illegible]

② [illegible]

③ [illegible]

④ [illegible]

A [illegible]①②　　B [illegible]①③C [illegible]②④　D [illegible]③④

5. [illegible]

① [illegible]

② [illegible]

③ [illegible], [illegible]

④ [illegible]

⑤ [illegible]

⑥ [illegible]

A. ①②③⑥　　B. ①②④⑥

C. ②③④⑥　　D. ③④⑤⑥

A

[illegible] 2014 [illegible]

[illegible]

[illegible]

① [illegible]

② [illegible]

③ [illegible]

[illegible]

- [illegible]

① [illegible]

- [illegible]

②_[illegible]

3. [illegible]

① [illegible]

[illegible]“[illegible]”

[illegible]“[illegible]”

—“[illegible]”[illegible]“[illegible]”[illegible]

[illegible]

[illegible]“[illegible]”

— [illegible]

[illegible]

②

- [illegible]

——[illegible]

- [illegible]

——[illegible]

[illegible], [illegible]

[illegible]

		[illegible] ([illegible])	[illegible] ([illegible])
[illegible]	[illegible]	[illegible]	[illegible]
	[illegible]	[illegible] ([illegible]) [illegible]	[illegible]
	[illegible]	[illegible]	[illegible]
[illegible]	① [illegible] ② [illegible] ③ [illegible]		

[illegible]

[illegible]①[illegible]

② [illegible]

③ [illegible] ;[illegible]

④ [illegible]

[illegible]①[illegible]

② [illegible]

1.

2.

3.

1.

2.

3.

• [illegible]

- 1. [illegible] ✓
- 2. “[illegible]”[illegible]“[illegible]”[illegible] ✗
- 3. [illegible]“[illegible]”[illegible]“[illegible]”[illegible] ✓
- 4. [illegible]
- 5. [illegible] ✓
- 6. [illegible] ✓
- 7. [illegible] ✗
- 8. [illegible] ✗
- 9. [illegible] ✗
- 10. [illegible] ✓
- 11. [illegible] ✗ ✗

[illegible]

✗ [illegible]

思维辨析

1.联系、发展、矛盾的关系

矛盾揭示了事物联系的根本内容，即联系是既相互对立、又相互统一的矛盾双方之间的联系。矛盾揭示了事物发展的源泉和动力，即事物内部对立统一的关系是事物发展的源泉和动力。因此，辩证法承认矛盾，就必然承认事物的联系和发展，主张用联系和发展的观点看世界。形而上学否认矛盾，就必然否定事物的联系和发展，主张用孤立和静止的观点看问题。这也说明了为什么矛盾是唯物辩证法的实质和核心。

[illegible]

① [illegible]

② [illegible]

③ [illegible]

④ [illegible]

[illegible]

1. [illegible]“[illegible]”[illegible]“[illegible]”[illegible]
[illegible]
[illegible]“[illegible]”[illegible]（　　）

A. [illegible]“[illegible]”[illegible]

B. [illegible]“[illegible]”[illegible]

C. “[illegible]”[illegible]

D. [illegible]

C

2.[illegible]2017[illegible]3[illegible]

[illegible]

- A[illegible]
- B[illegible]
- C[illegible]
- D[illegible]

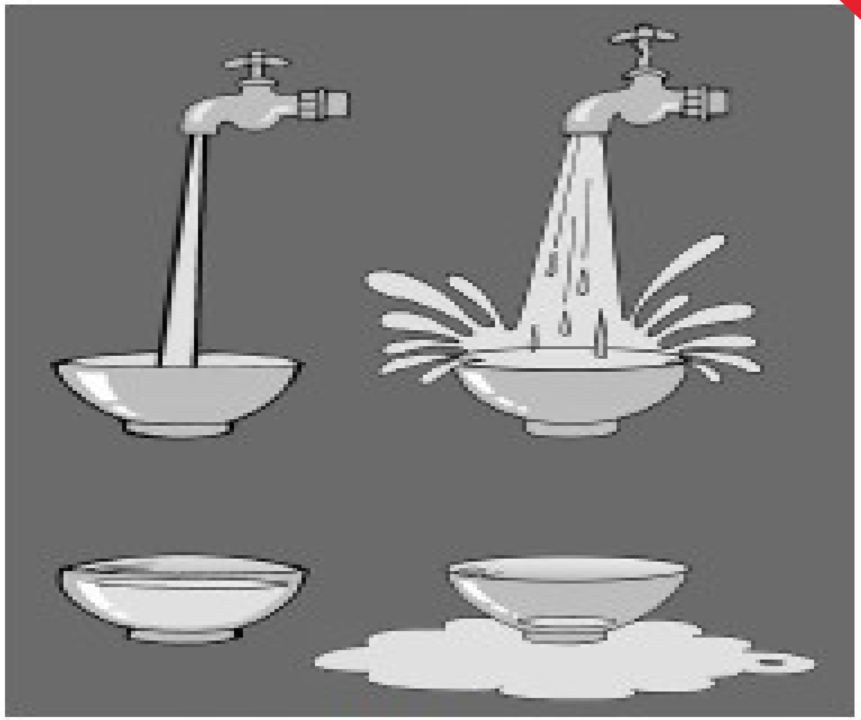

图 3

D

3. [illegible]2020·[illegible] 2020[illegible]1[illegible]15[illegible]

[illegible]

[illegible]）

① [illegible]

② [illegible]

③ [illegible]

④ [illegible]

A [illegible]①③　B [illegible]①④　C [illegible]②③　D [illegible]②④

D

4. [illegible] 2014 [illegible]

① [illegible]

② [illegible]

③ [illegible]

5. [illegible]2018[illegible] 1928 [illegible] 2 [illegible]“[illegible]”，[illegible]，[illegible] [illegible]，[illegible]，[illegible]，[illegible]“[illegible]”[illegible] [illegible]，[illegible] 2016—2017[illegible]，[illegible]，[illegible]

[illegible]，[illegible]，[illegible] [illegible] (6 [illegible])

① [illegible]，[illegible]，[illegible]

② [illegible]，[illegible]，[illegible]，[illegible]；

③ [illegible]，[illegible]，[illegible]

④ [illegible]，[illegible]，[illegible]

[illegible]…[illegible]…[illegible]

① [illegible]

② [illegible]

③ [illegible]

④ [illegible]

⑤ [illegible]

⑥ [illegible]

- 6. [illegible]2016[illegible]“[illegible]”[illegible]“[illegible]”[illegible]BBC2[illegible]“[illegible]”[illegible]“[illegible]”[illegible]
- [illegible]10[illegible]

- [illegible]“[illegible]”[illegible]“[illegible]”[illegible]“[illegible]”[illegible]“[illegible]”[illegible]